shopvalves.com

NOTES:

- TANK MATERIAL: STAINLESS STEEL
- ALL DIMENSIONS ARE ±0.25"
- DRAWING NOT FOR CONSTRUCTION
- CONSULT FACTORY AT TIME OF ORDER FOR CURRENT PRINT
- INLET Y-STRAINER OR BASKET STRAINER ALSO AVAILABLE

CONTROL PANEL OPTIONS ALSO AVAILABLE (NOT SHOWN):

- NEMA 4 OR NEMA4X OR NEMA3R CONSTRUCTION
- ELECTRIC ALTERNATOR
- POWER ON LIGHT
- PUMP TEST BUTTON
- PUMP RUN TIME METER
- EXTRA DRY CONTACTS
- UL/CUL LABELED PANEL
- HIGH LEVEL ALARM HORN & LIGHT W/SILENCE SWITCH
- LEAD-AUTO-LAG SELECTOR SWITCH

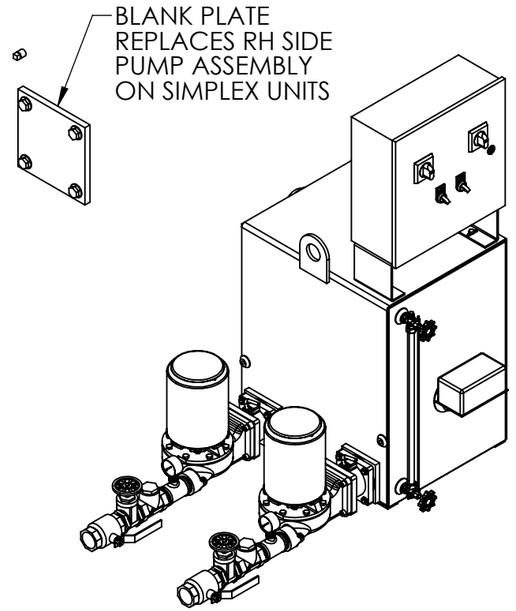

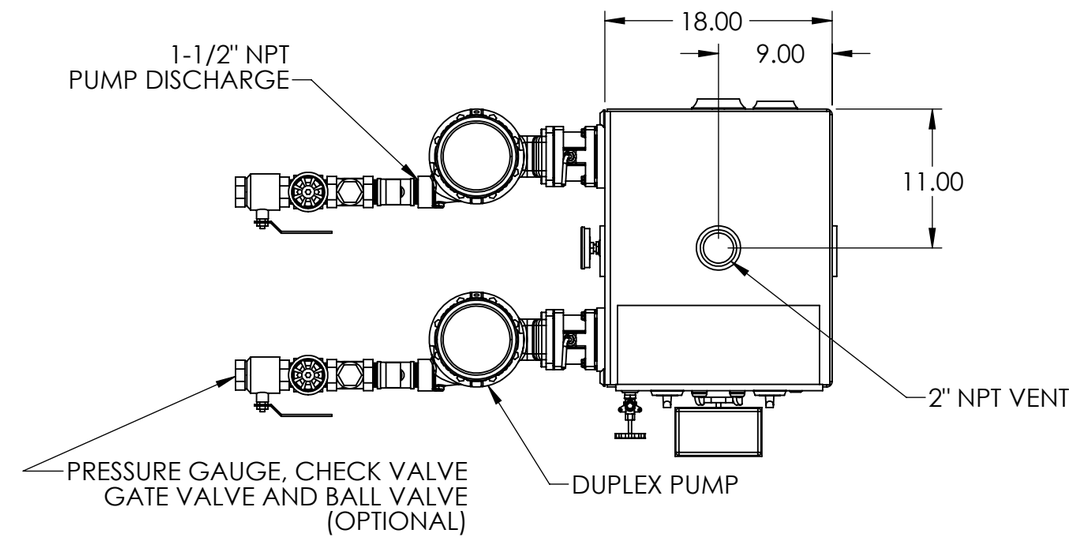

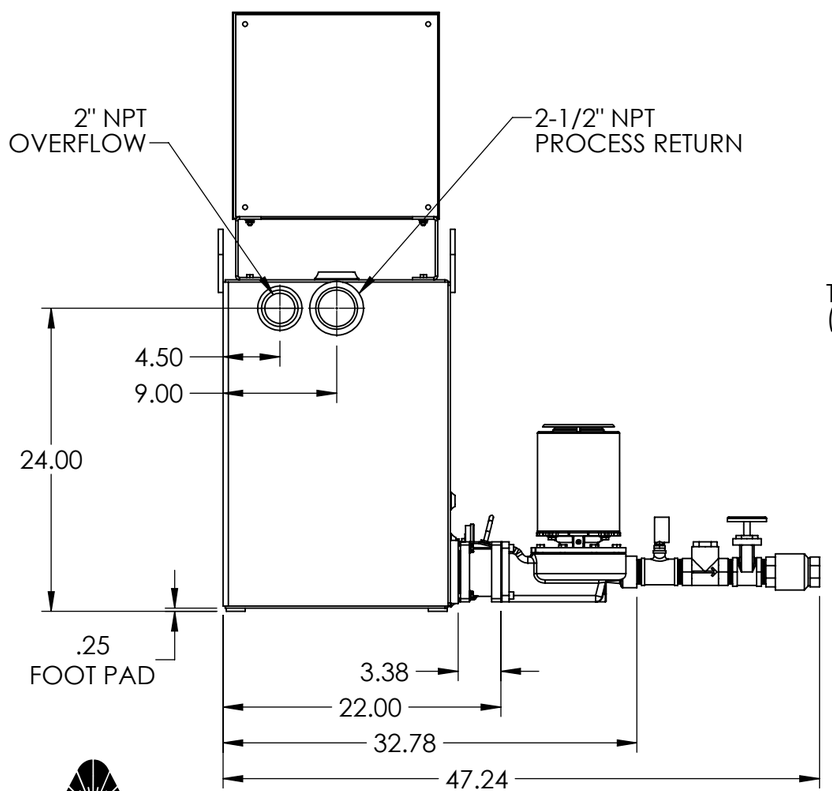

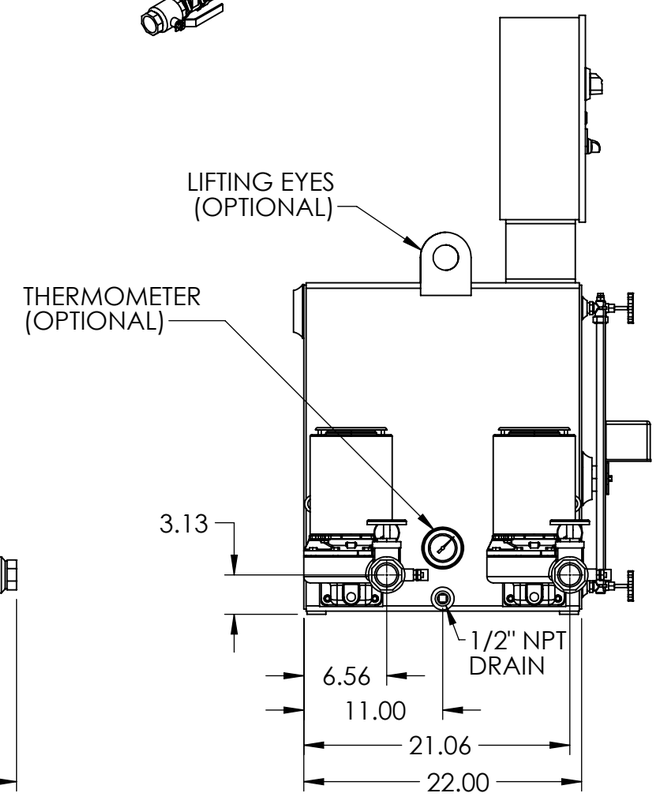

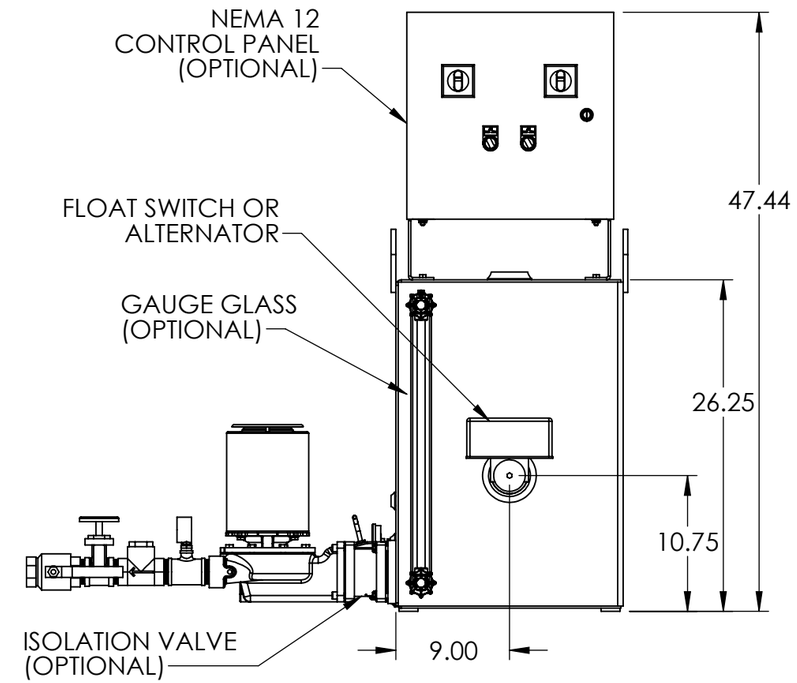

REV	DESCRIPTION	ECN	NAME	DATE
A	Initial Design		GJM	4/12/2018

PART NO: Ref PartNo

FABRICATION TOLERANCES UNLESS OTHERWISE SPECIFIED: DIMENSIONS ARE IN INCHES

TOLERANCES:
ANGULAR DIMENSIONS ±1°
FRACTIONS ±1/32

TWO PLACE DECIMAL ±0.06
THREE PLACE DECIMAL ±0.030

	NAME	DATE
DRAWN	GJM	4/12/2018
CHECKED		
ENG APPR.		

PRODUCT FAMILY: HTSP Boiler and Condensate

PRODUCT CATEGORY

THIRD ANGLE PROJECTION

TITLE
45 GALLON SIMPLEX/DUPLEX
4300 SERIES
"J" CONDENSATE PUMP

SHEET: 1 OF 1 | WEIGHT: 360.57 | DRAWING MAY NOT BE PRINTED TO SCALE. SCALE: 1:12 | DWG NO. 684.43045.00J | REV A

Armstrong®
armstronginternational.com